Electrolux PROFESSIONAL

ITEM #

MODEL #

NAME #

SIS #

AIA #

Frozen
Frozen granita, creams and soft-ice cream dispenser with 2 bowls

562515 (GT2PR290)

Frozen Granita, Frozen Cream and Soft Ice Cream Dispenser with 2x5 l insulated bowls, R290

Short Form Specification

Item No.

2x5lt counter machine, dispensing smooth soft ice-cream, cold cream, sorbet and frozen yogurt. It works with water or milk/based dried products or with brik mixtures ready to be poured into the bowl. The ITANK ™ Technology prevents ice accumulation on the outer side of the bowl. LED-based electronic keypad. Safety stop system and USB customizable software.

APPROVAL:

Main Features

- Compact counter machine, dispensing smooth soft ice-cream, cold cream, sorbet and frozen yogurt; it can be used also for slush.
- Works with water or milk/based dried products or with brik mixtures ready to be poured into the bowl.
- The ITANK ™ Technology prevents ice accumulation on the outer side of the bowl, reducing condensation and increasing the cooling power of the machine.
- LED-based electronic keypad.
- Safety stop system.
- USB customizable software.
- The insulated tank guarantees higher cooling efficiency and lower effect of the external temperature on product's preparation and maintenance time reducing condense and draining; it is the best solution in hot climate conditions.
- Easy to use thanks to the adjustable push button control panel: when pressing it the rotation spees raises and the product is pushed out easily.

Frozen
Frozen granita, creams and soft-ice cream dispenser with 2 bowls

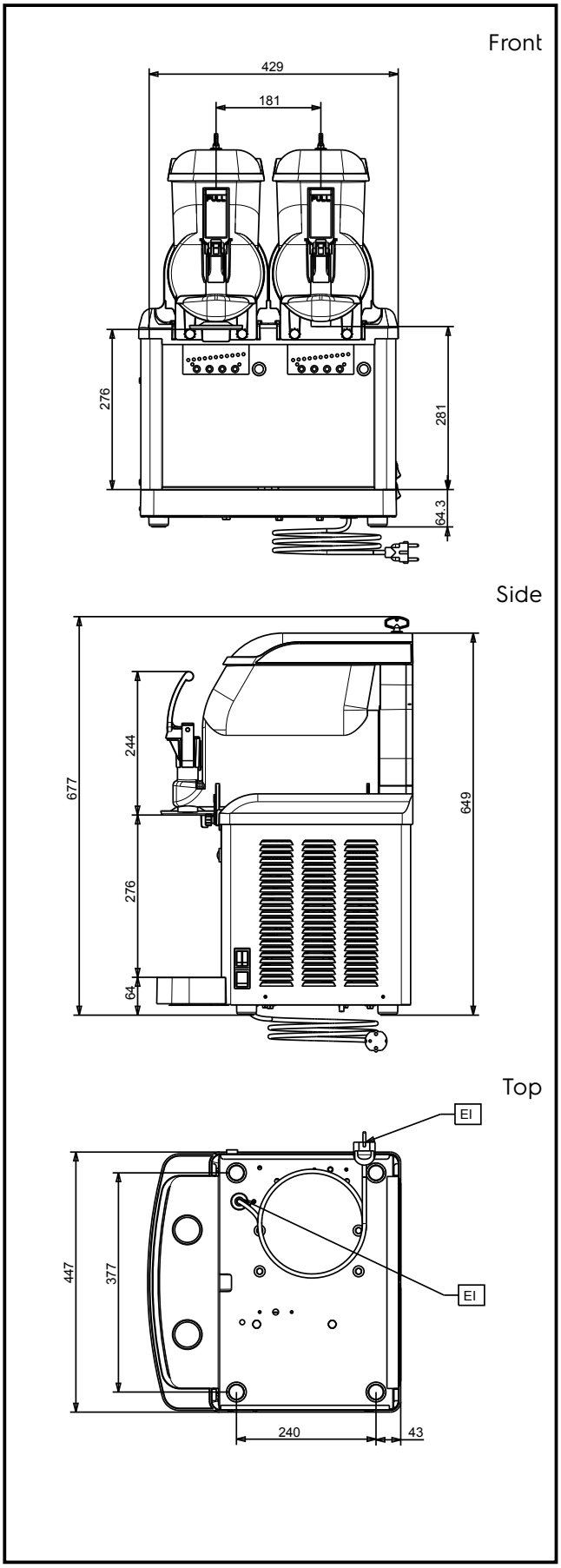

Electric

Supply voltage:	
562515 (GT2PR290)	220-240 V/1 ph/50 Hz
Electrical power max.:	0.63 kW

Key Information:

External dimensions, Width:	450 mm
External dimensions, Depth:	435 mm
External dimensions, Height:	650 mm
Net weight:	46 kg

Sustainability

Refrigerant type:	R290
Refrigerant weight:	102 g

The company reserves the right to make modifications to the products without prior notice. All information correct at time of printing.

2024.10.07